domix S

PINOUT

Domotic Module for smart home & co

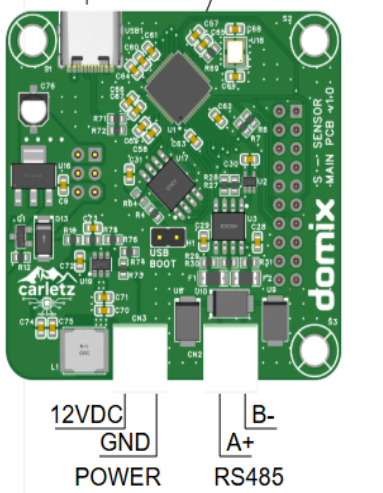

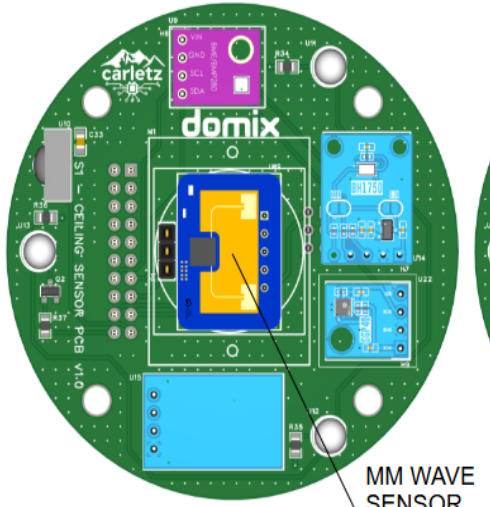

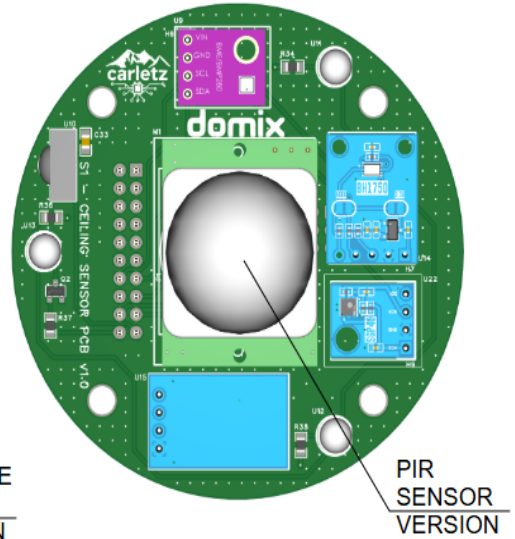

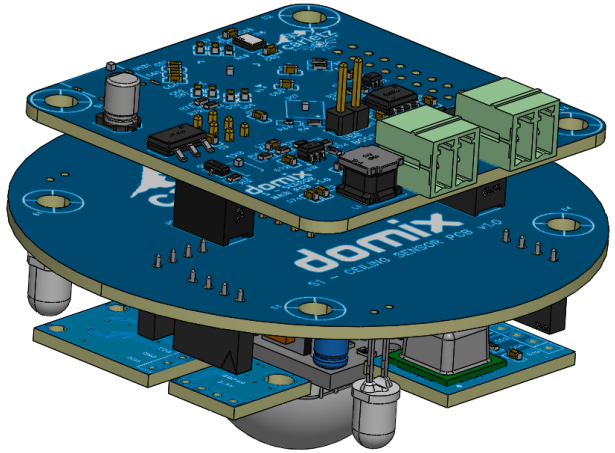

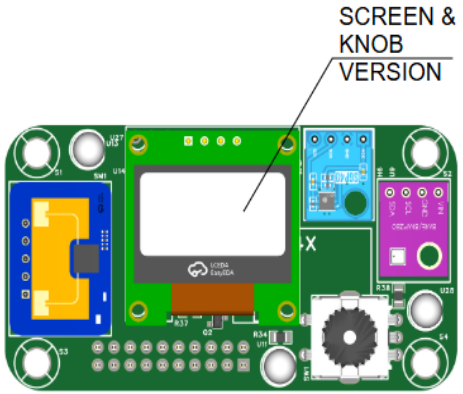

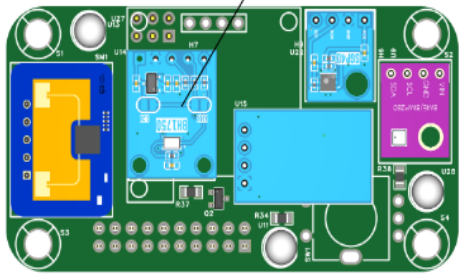

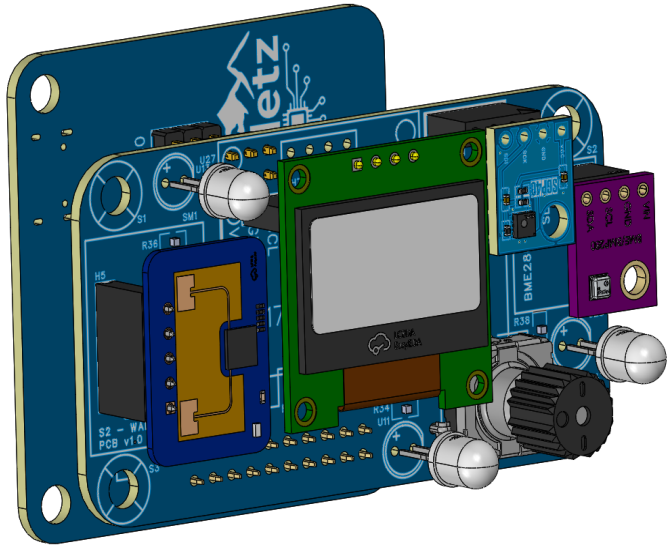

carletz	DOMIX - Domotic module for smart home & co		Create at	2026-02-17	Drawn: carletz
			Update at	2026-02-23	Reviewed: carletz
	Version	Size	Page 1 Total 4	Schematic	S - Core Sensor Module
	1	A4	EasyEDA	Board: S - CORE SENSOR	Page / Description

USB & Power Supply

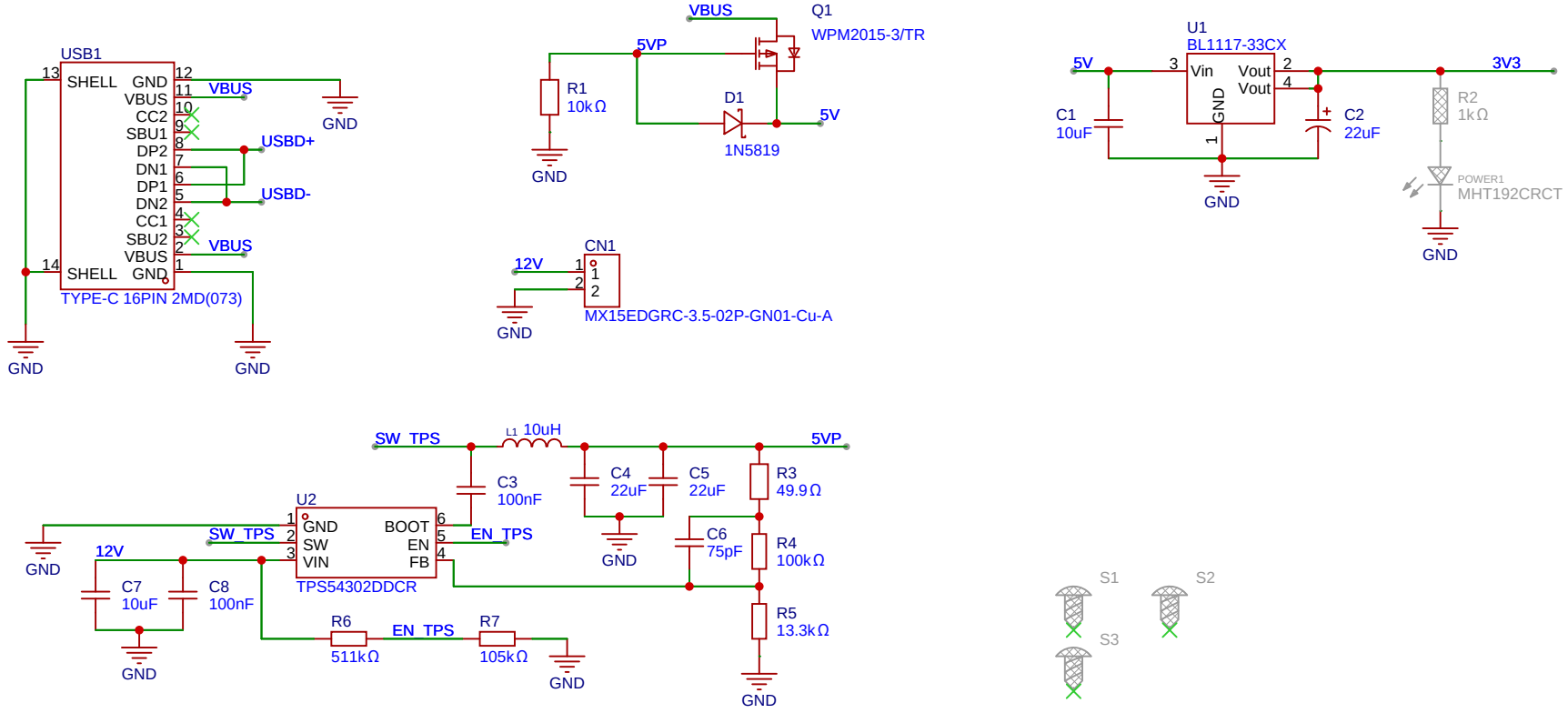

DOMIX - Domotic module for smart home & co			Create at	2026-02-17	Drawn carletz
			Update at	2026-02-23	Reviewed carletz
Version	Size	Page 2 Total 4	Schematic	S - Core Sensor Module	
1	A4	EasyEDA	Board	S - CORE SENSOR	Page USB & Power

Microcontroller

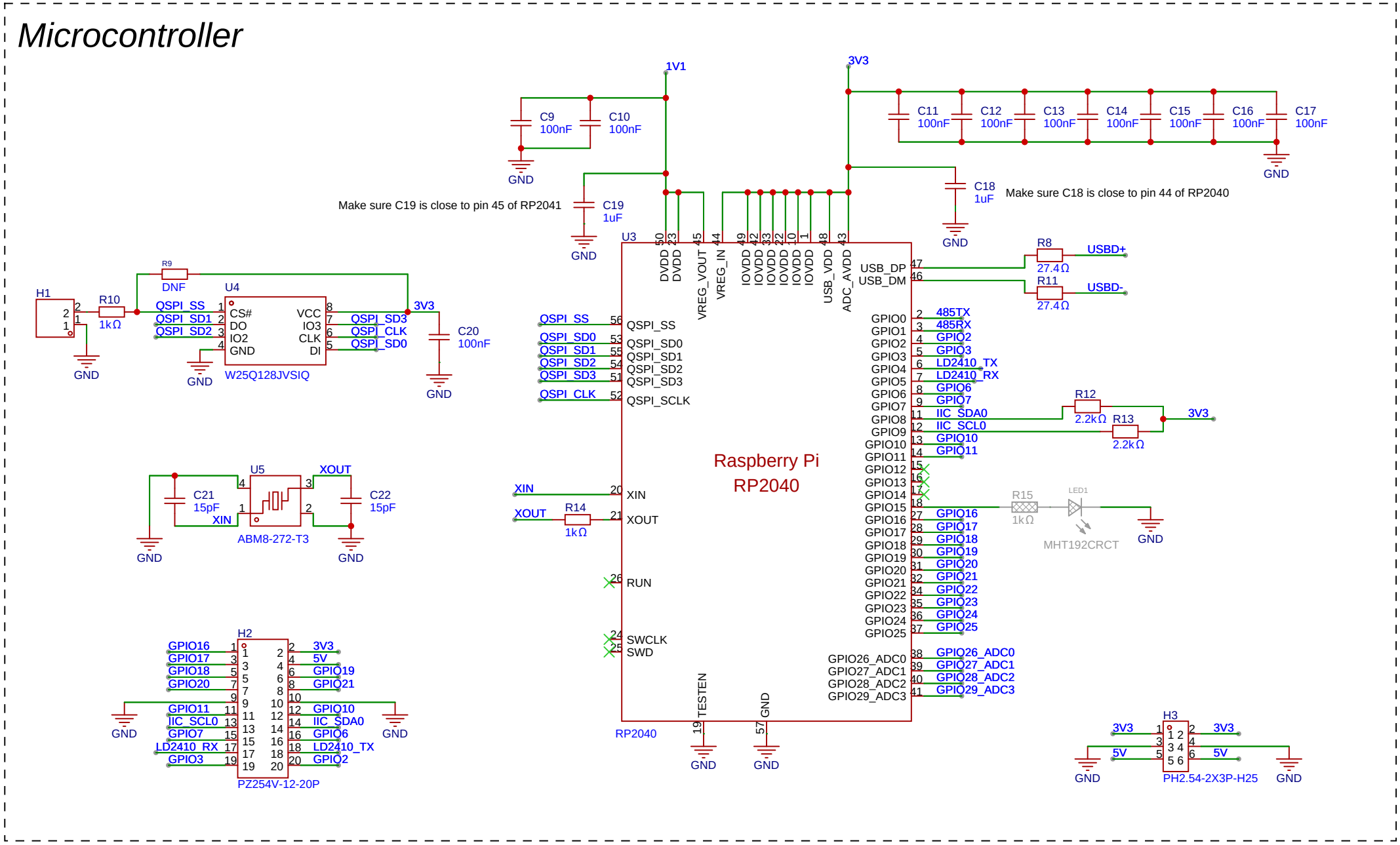

DOMIX - Domotic module for smart home & co			Create at	2026-02-17	Drawn carletz
			Update at	2026-02-23	Reviewed carletz
Version	Size	Page 3 Total 4	Schematic	S - Core Sensor Module	
1	A4	EasyEDA	Board	S - CORE SENSOR	Page Microcontroller

RS485

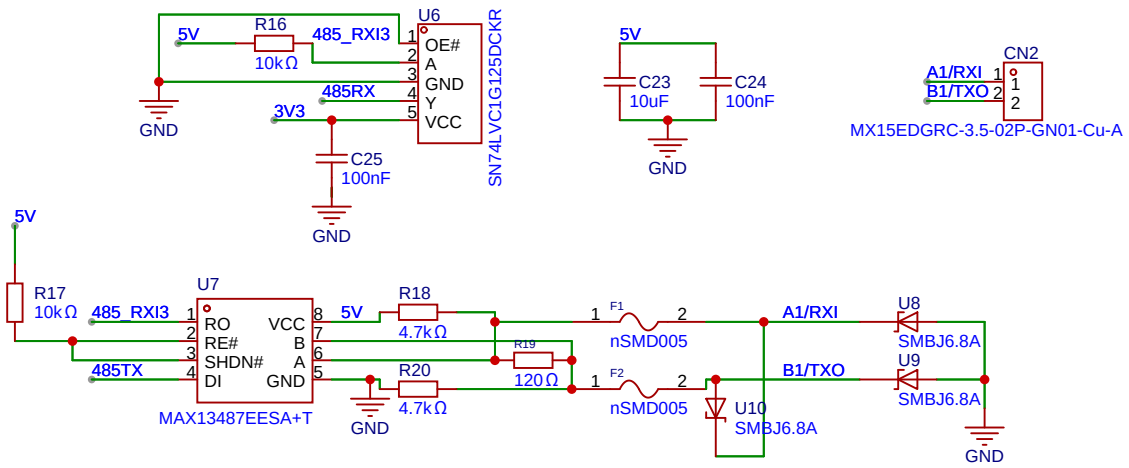

carletz	DOMIX - Domotic module for smart home & co		Create at	2026-02-17	Drawn: carletz
			Update at	2026-02-23	Reviewed: carletz
	Version: 1	Size: A4	Page 4 Total 4	Schematic	S - Core Sensor Module
			EasyEDA	Board: S - CORE SENSOR	Page: RS485